PARTS LIST

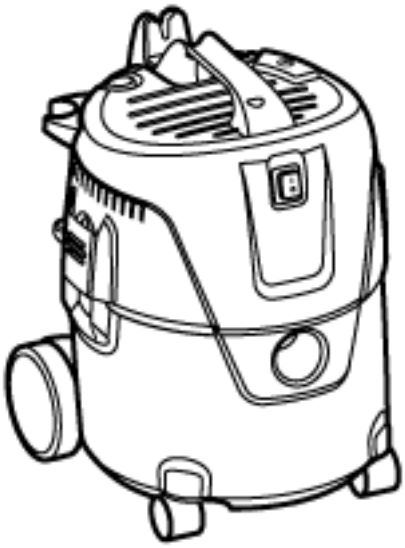

2021.12.23

www.nilfisk.com

Nilfisk

TABLE OF CONTENTS

AERO 21-01 PC top 1
Filter and motor 3
AERO container 20L 5
AERO 21 Accessories 7
Recommended spare parts 9

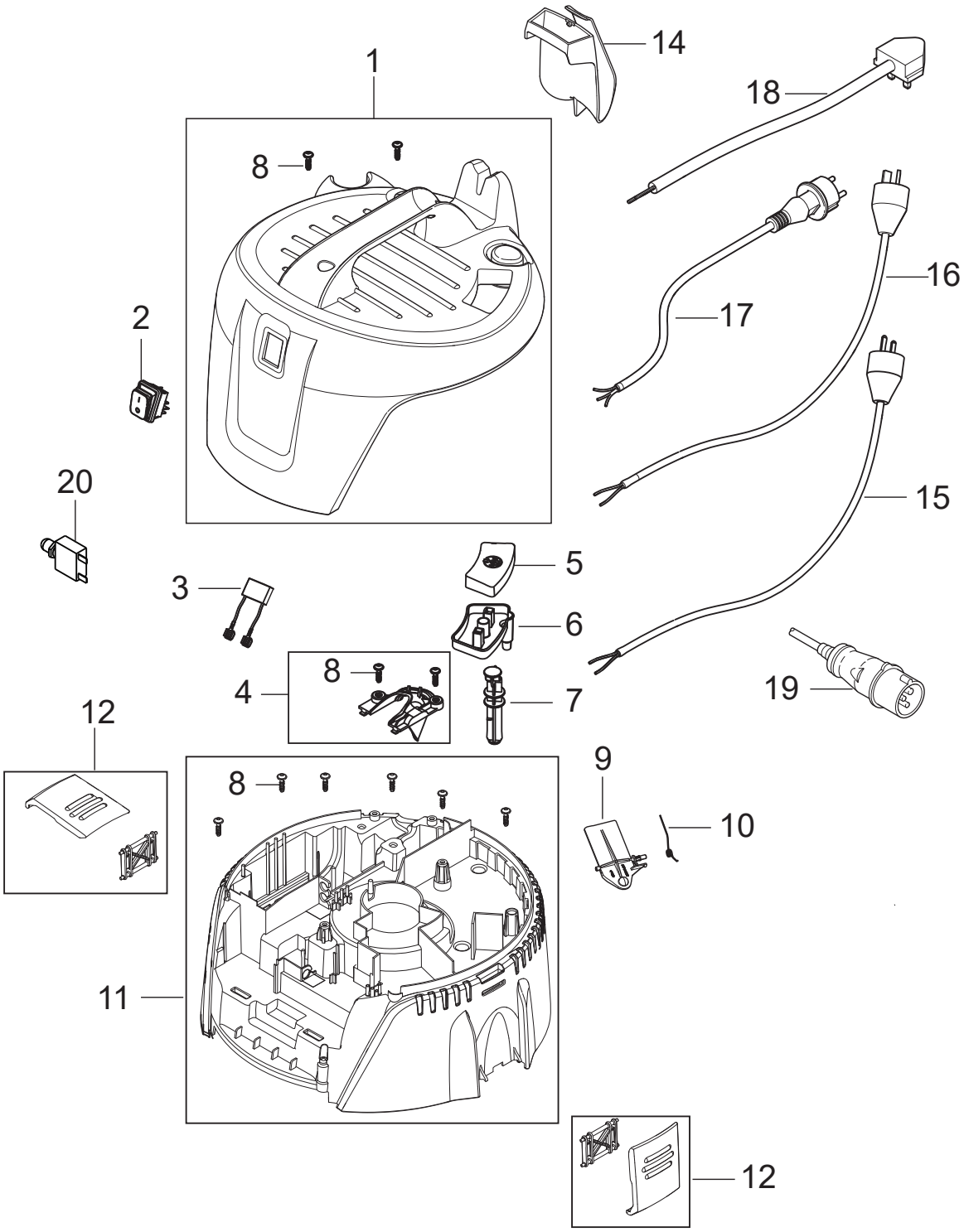

AERO 21-01

Pos.	Artikelnummer	Hoeveelheid	Omschrijving	Notes
1	107409124	1	HEAD COVER BASIC	
2	107404540	1	SET SCHAKELAAR 0-1 DUBBELE POLE SET	
3	107404542	1	CONDENSATOR AERO	
4	107409125	1	Kabel Uitgang	[1]
5	107409183	1	PC BUTTON PP BLACK	
6	107409127	1	PC DRAIN HOUSING	
7	107409128	1	PC ROD BASIC	
8	302004029	1	Schroef 5X18	
9	107409129	1	PC FLAP - KIT	
10	909100083	1	Veer +0.9X18X45	
11	107409149	1	Motorframe Aero	
12	107409130	2	Motorklem p.stuk	
14	107409981	1	Hose/Kabelhaak AERO 21	
15	302002394	1	POWERCORD H05VV-F 2X0.75X5.7M	[2]
16	302000455	1	POWER CORD SJTW-A AWG18/2X8.25	[3]
16	107410819	1	POWER CORD JP	[4]
17	302000452	1	POWER CORD H05RR-F 2X0.75X8.25 M	[5]
18	60904	1	Netspanningskabel	[6]
19	60282	1	POWER CORD H07BQ-F 2X1.5 SQUAR	[7]
20	56315255	1	Zender druk	[8]

Part Notes:

[1] - TSB-LI-VACS-2020-001 AERO 21 Cable can be pulled out of machine
[2] - EU
[3] - US
[4] - JP
[5] - CH
[6] - UK (230V 50Hz)
[7] - UK (110V 50Hz)
[8] - AUS/NZ

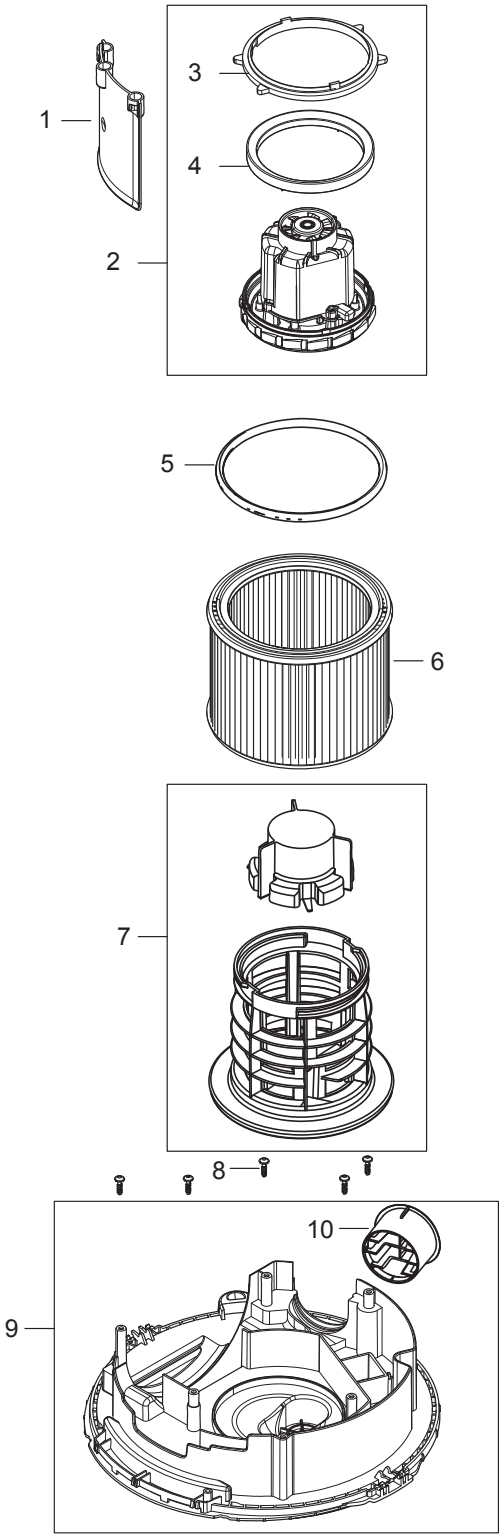
1
2
3
4
5
6
7
8
9
10

Pos.	Artikelnummer	Hoeveelheid	Omschrijving	Notes
1	107409159	1	DEFLECTOR SHIELD	
2	107410825	1	MOTOR KIT 1200W 230V/50-60HZ	[1]
2	107409160	1	Motor 1000W 220-240V/50-60HZ	
2	107409162	1	MOTOR KIT 1000W 110-120V/50-60HZ	
2	107412971	1	MOTOR 1200W 100V 50/60HZ JP	[2]
3	107409163	1	UPPER MOTOR SEALING	
4	107409164	1	LOWER MNOTOR SEALING	
5	107409165	1	DICHTING FILTER	
6	302000490	1	Filterelement ATTIX M-kl Ø185x140	
7	107402646	1	Filterklem Kooi Attix	
8	302004029	6	Schroef 5X18	
9	107409166	1	BASEPLATE WITH OUTLET	
10	107409167	1	OUTLET	

Part Notes:

[1] - AERO 26-2L
[2] - JP 50/60Hz

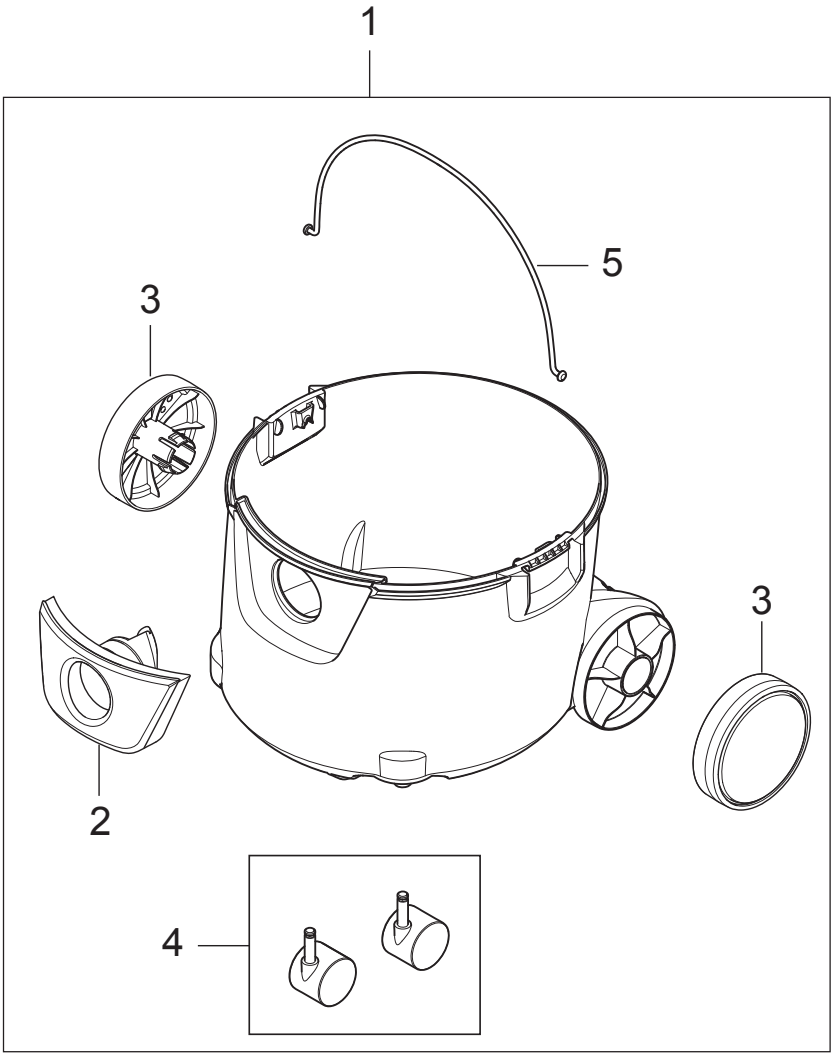
1
5
3
3
2
4

Pos.	Artikelnummer	Hoeveelheid	Omschrijving	Notes
1	107409168	1	AERO CONTAINER 20L CPL.	
2	107409169	1	Inlaatkoppeling	
3	107409170	2	Achterwiel Aero p.st.	[1]
4	140 6422 500	1	Voorwielenkit (2stk)	
5	107409171	1	HANDLE CONTAINER	

Part Notes:

[1] - TSB-LI-VAC-2015-002 AERO 21-26-31 wheel

DE TSB-LI-VAC-2015-002 AERO 21-26-31 Rad

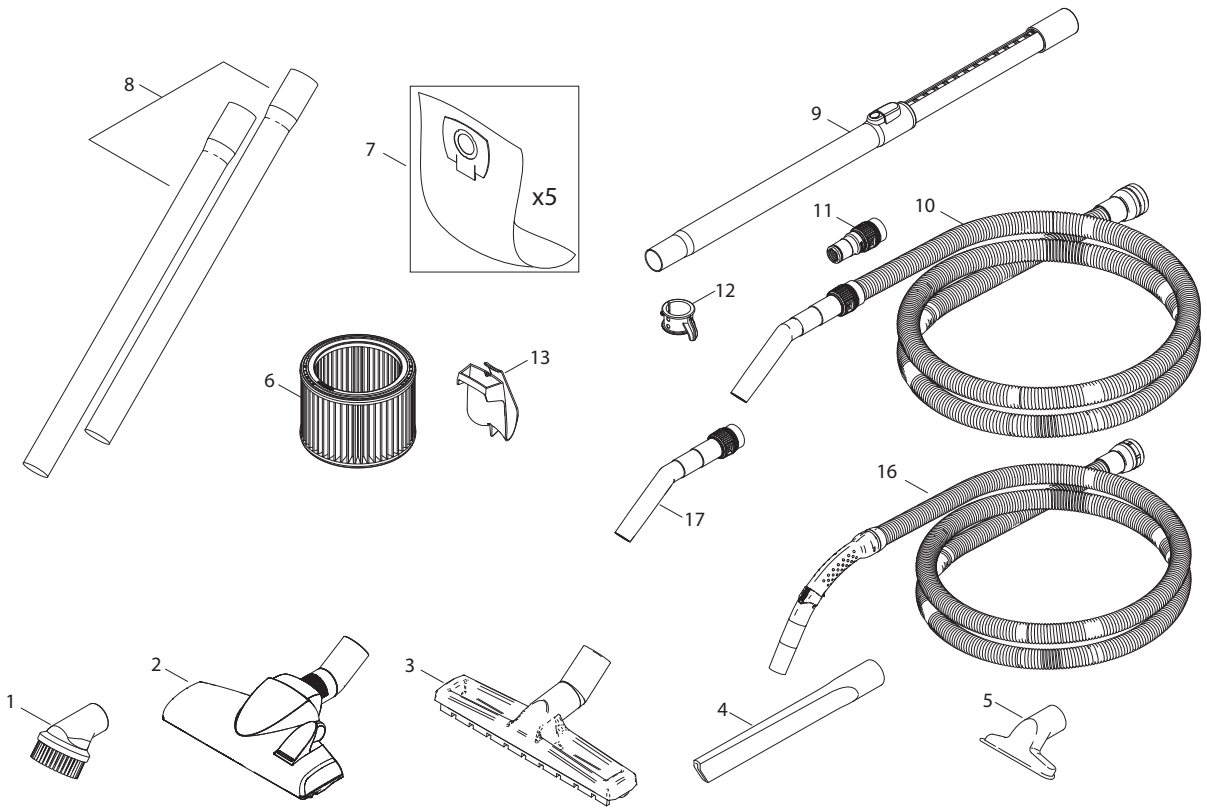
8
7
x5
9
11
10
12
6
13
16
17
1
2
3
4
5

Pos.	Artikelnummer	Hoeveelheid	Omschrijving	Notes
0	107412601	1	Doos Aero 21 10 st. INOX	
1	302002509	1	Zwarte borstel Ø 36	
2	302002365	1	Combimondstuk 36 x 260 mm	
3	107402706	1	Zuigmond 300 x 36mm W/D -KIT	
3	107407310	1	Vloermondstuk Ø 32 mm nat	
3	107407311	1	Vloermondstuk Ø 32 mm droog	
4	29541	1	Zuigmond Ø 36 mm x 200 mm	
5	14295	1	Univ. Zuigmond kunststof 36 mm x 115 mm	
6	302000490	1	Filterelement ATTIX M-kl Ø185x140	
7	107419590	1	FLEECE FILTER BAG 5 PCS AERO	
8	107400032	1	Zuigbuisset 36 x 500 mm (2 st.) alu.	
8	302000529	1	Zuigbuisset 36 x 500 mm (2 st.) chroom	
8	40696	1	Zuigbuisset 36 500MM (2 stk) Kunststof	
9	107402654	1	Telescoopbuis Ø 36 575-930 mm CR-ST	
9	107402705	1	Telescopic tube plast.-kit	[1]
10	107409976	1	Zuigslang 32mm zuigbocht 36 /3.5 mtr	
11	107409977	1	Slang adaptor met luchtregelaar	[2]
12	107409978	1	TELESCOPIC TUBE HOLDER KIT D32	
12	107409979	1	TUBE HOLDER KIT D36	
13	107409981	1	Hose/Kabelhaak AERO 21	
16	107405599	1	Slang Ø 32x2500 compleet	[2]
16	107405600	1	Zuigslang Ø 32x1800 compleet	[2]
16	107406115	1	Zuigslang Ø 32X3500 compleet	[2]
16	107418980	1	UNIV HOSE KIT D32X3500 W. TOOL ADAPTER	[3]
17	107413340	1	BENT END - ASSY - KIT	[4]

Part Notes:

[1] - ITEM NO LONGER AVAILABLE

[2] - TSB-LI-VACS-2017-01 - AERO and ATTIX hose

DE TSB-LI-VACS-2017-01 AERO und ATTIX Click-System Saugschlauch

[3] - Include hose and adapter 107409977

[4] - TSB-LI-VACS-2017-01 - AERO+ATTIX hose

DE TSB-LI-VACS-2017-01 AERO+ATTIX Click-System Saugschlauch

TSB-LI-VACS-2018-01 - AERO Bent end

DE TSB-LI-VACS-2018-01 AERO Handrohr

Pos.	Artikelnummer	Hoeveelheid	Omschrijving	Notes
1	107400032	1	Zuigbuisset 36 x 500 mm (2 st.) alu.	
2	107400059	1	SOCKET 10A/250V CH	
3	107402654	1	Telescoopbuis Ø 36 575-930 mm CR-ST	
4	107402705	1	Telescopic tube plast.-kit	[1]
5	107402706	1	Zuigmond 300 x 36mm W/D -KIT	
6	107404540	1	SET SCHAKELAAR 0-1 DUBBELE POLE SET	
7	107404542	1	CONDENSATOR AERO	
8	107405599	1	Slang Ø 32x2500 compleet	
9	107405600	1	Zuigslang Ø 32x1800 compleet	
10	107406115	1	Zuigslang Ø 32X3500 compleet	
11	107407310	1	Vloermondstuk Ø 32 mm nat	
12	107407311	1	Vloermondstuk Ø 32 mm droog	
13	107409130	1	Motorklem p.stuk	
14	107409135	1	SWITCH 1-0-TOOL	
15	107409188	1	PCBA CHAMELEON 21 EA 230V	
16	107409160	1	Motor 1000W 220-240V/50-60HZ	
18	107409162	1	MOTOR KIT 1000W 110-120V/50-60HZ	
19	107409163	1	UPPER MOTOR SEALING	
20	107409164	1	LOWER MNOTOR SEALING	
21	107409165	1	DICHTING FILTER	
22	107409173	1	INLET GASKET	
23	107402646	1	Filterklem Kooi Attix	
24	107409976	1	Zuigslang 32mm zuigbocht 36 /3.5 mtr	
25	107409977	1	Slang adaptor met luchtregelaar	
26	107409978	1	TELESCOPIC TUBE HOLDER KIT D32	
27	107409979	1	TUBE HOLDER KIT D36	
28	140 6422 500	1	Voorwielenkit (2stk)	
29	14295	1	Univ. Zuigmond kunststof 36 mm x 115 mm	
30	29541	1	Zuigmond Ø 36 mm x 200 mm	
31	302000490	1	Filterelement ATTIX M-kl Ø185x140FILTER ELEMENT 185X140 PET M-CLASS	
32	302000529	1	Zuigbuisset 36 x 500 mm (2 st.) chroom	
33	302000455	1	POWER CORD SJTW-A AWG18/2X8.25	
34	302002052	1	PLUG SOCKET PLATE	
35	302002365	1	Combimondstuk 36 x 260 mm	
36	302002394	1	POWERCORD H05VV-F 2X0.75X5.7M	
37	302002404	1	Stofzak AERO 4 st.FILTER BAG AERO 4 PCS	
38	302002509	1	Zwarte borstel Ø 36	
39	302004034	1	Socket 16A/250V EU	
40	40696	1	Zuigbuisset 36 500MM (2 stk) Kunststof	
41	61130	1	Snoer H05VV-F 3G 1,5x5,5	
42	909100083	1	Veer +0.9X18X45	

Part Notes:

[1] - ITEM NO LONGER AVAILABLE

© 2021 - Nilfisk A/S